SPECIFICATION:

JOSAM 29100 SERIES COATED CAST IRON ROOF DRAIN WITH LARGE CAST IRON DOME, NON-PUNCTURING CLAMP RING WITH INTEGRAL GRAVEL STOP, LARGE SUMP WITH WIDE ROOF FLANGE AND NO-HUB BOTTOM OUTLET.

ROOF DRAIN

EXTRA-LARGE SUMP

SERIES **29100**

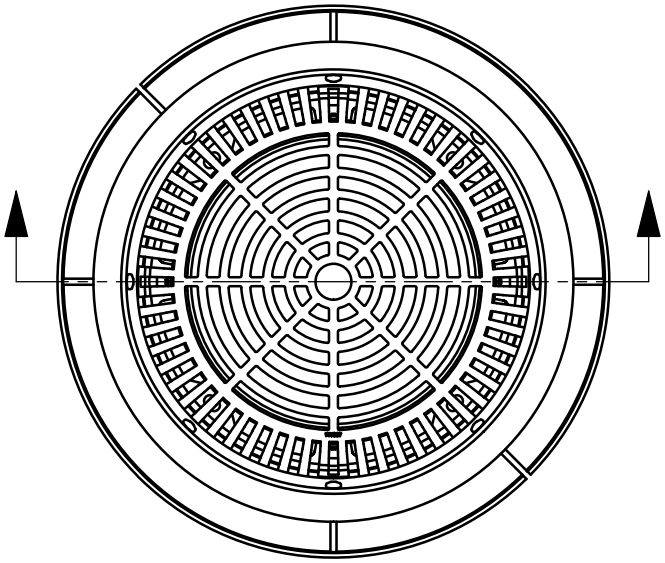

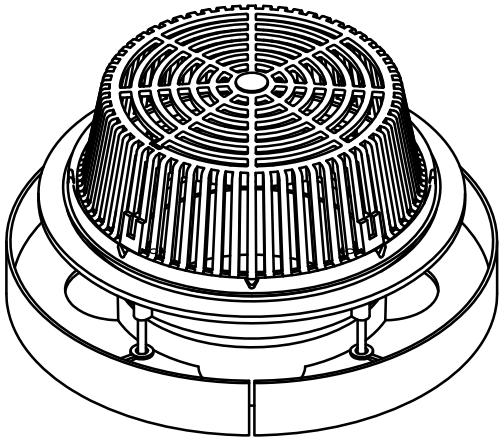

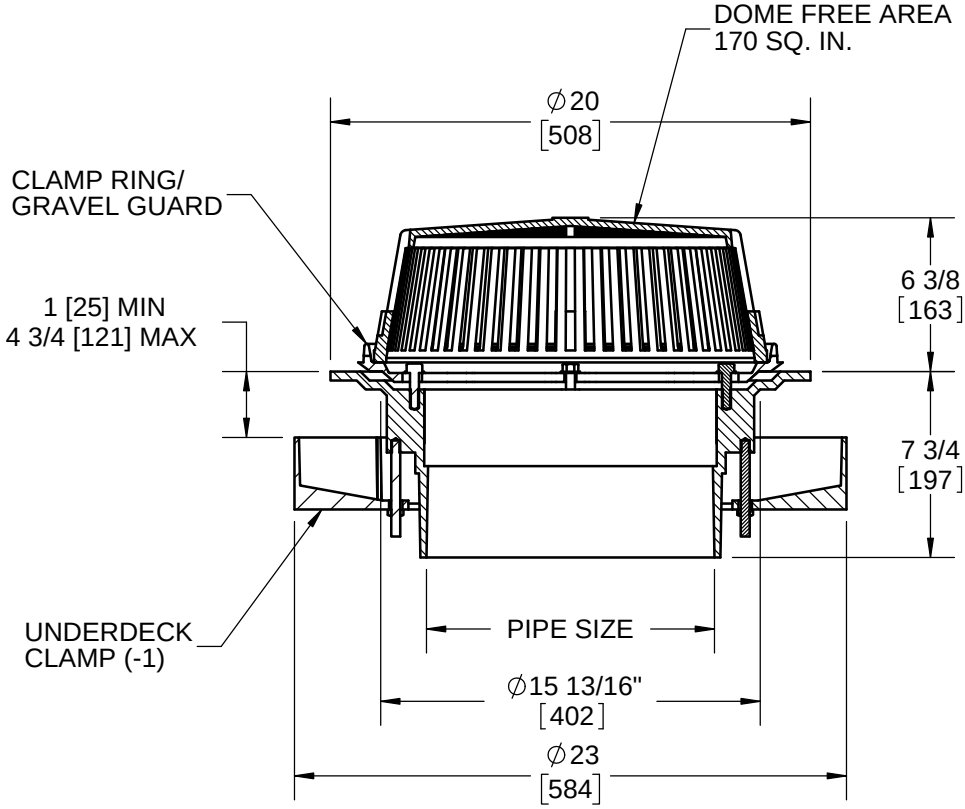

	MODEL	PIPE SIZE
	29108	8"
	29110	10"
	29112	12"

** -10 EXTENSION 4" STANDARD

	-1	DECK CLAMP ASSEMBLY
	-2	DRAIN RECEIVER
	-3	DECK CLAMP ASSEMBLY AND DRAIN RECEIVER
	-10	FIXED EXTENSION COLLAR, CAST IRON (SPECIFY HEIGHT**)
	-10-20	FIXED EXTENSION COLLAR, GALVANIZED (SPECIFY HEIGHT**)

	-17	2" HIGH SOLID CLAMPING COLLAR
	-174	4" HIGH SOLID CLAMPING COLLAR
	-20	GALVANIZED CAST IRON PARTS
	-AER	ADJUSTABLE EXTENSION W/ RODS
	-VP	VANDAL-PROOF DOME

DATE OF LAST CHANGE: 7/02/18

DIMENSIONS ARE SUBJECT TO MANUFACTURERS TOLERANCES AND CHANGE WITHOUT NOTICE. WE CAN ASSUME NO RESPONSIBILITY FOR USE OF SUPERSEDED OR VOID DATA.

JOSAM
MICHIGAN CITY, INDIANA

NOTES

WARNING: Cancer and Reproductive Harm - www.P65Warnings.ca.gov